Defender™3000

Hybrid Bench Scales



Bench Scales for Basic Industrial Applications

The Defender 3000 Hybrid bench scales are ideal for general weighing, simple counting and checkweighing applications in production, packaging, warehouse, inventory, shipping and receiving areas. The Defender 3000 Series features a simple, yet rugged design and IP66 stainless steel indicator with tactile keys, multicolor backlit LCD display, and built-in rechargeable battery.

Unique Features:

- Results are clearly shown using the large, bright backlit LCD display. In Checkweighing mode display changes color (yellow/green/red) to alert when within the target weight range.
- This industrial scale features a 304 stainless steel platform, powder-coated steel tubular frame, column and IP65 aluminum load cell. Indicator features an IP66 stainless steel housing and mounting bracket.
- Features software for Parts Counting, Checkweighing and Totalization. Includes RS232 with optional USB Device or Ethernet for printing or data connectivity. Approved models are equipped with EasyConnect™ solution.

DEFENDER™3000 *Hybrid Bench Scales*

Specifications

Column Mount Bench Scale

Model	i-D33XW15B1R1-EU i-D33XW15B1R1-GB	i-D33XW30B1R1-EU i-D33XW30B1R1-GB	i-D33XW60B1R1-EU i-D33XW60B1R1-GB	i-D33XW60B1L2-EU i-D33XW60B1L2-GB	i-D33XW150B1L2-EU i-D33XW150B1L2-GB
Capacity x Default Readability	15 kg x 2 g	30 kg x 5 g	60 kg x 10 g		150 kg x 20 g
Maximum Displayed Resolution	1:7,500	1:6,000			1:7,500
Linearity/Repeatability	±1d				
Certified Model	**i-D33XW15B1R1EU-M i-D33XW15B1R1GB-M**	**i-D33XW30B1R1EU-M i-D33XW30B1R1GB-M**	**i-D33XW60B1R1EU-M i-D33XW60B1R1GB-M**	**i-D33XW60B1L2EU-M i-D33XW60B1L2GB-M**	**i-D33XW150B1L2EU-M i-D33XW150B1L2GB-M**
Capacity x Certified/Approved Readability	15 kg x 5 g	30 kg x 10 g	60 kg x 20 g		150 kg x 50 g
Maximum Certified Resolution	1:3,000				
Indicator	304 stainless steel indicator				
Column	330 mm powder-coated steel			680 mm powder-coated steel	
Base Construction	Stainless steel removable weighing platform, powder-coated steel base construction, silicon sealed IP65 aluminum loadcell against moisture				
Safe Overload Capacity	150% of maximum capacity				
Stabilization Time	Within 1 second				
Operating Temperature Range	-10°C to 40°C				
Scale Dimensions (A x B x C x D x E x F)	355 x 305 x 122 x 75 x 542 x 489 mm			550 x 420 x 134 x 80 x 896 x 686 mm	
Shipping Dimensions (L x W x H)	642 x 497 x 212 mm M models: 495 x 455 x 373 mm			857 x 564 x 225 mm M models: 1022 x 687 x 247 mm	
Approx. Net Weight	12.1 kg			18.1 kg	
Approx. Shipping Weight	15.2 kg			22.2 kg	

Model	i-D33XW150B1X2-EU i-D33XW150B1X2-GB	i-D33XW300B1X2-EU i-D33XW300B1X2-GB	i-D33XW300B1V3-EU i-D33XW300B1V3-GB	i-D33XW600B1V3-EU i-D33XW600B1V3-GB
Capacity x Default Readability	150 kg x 20 g	300 kg x 50 g		600 kg x 100 g
Maximum Displayed Resolution	1:7,500	1:6,000		
Linearity/Repeatability	±1d			
Certified Model	**i-D33XW150B1X2EU-M i-D33XW150B1X2GB-M**	**i-D33XW300B1X2EU-M i-D33XW300B1X2GB-M**	**i-D33XW300B1V3EU-M i-D33XW300B1V3GB-M**	**i-D33XW600B1V3EU-M i-D33XW600B1V3GB-M**
Capacity x Certified/Approved Readability	150 kg x 50 g	300 kg x 100 g		600 kg x 200 g
Maximum Certified Resolution	1:3,000			
Indicator	304 stainless steel indicator			
Column	680 mm powder-coated steel		980 mm powder-coated steel	
Base Construction	Stainless steel removable weighing platform, powder-coated steel base construction, silicon sealed IP65 aluminum loadcell against moisture			
Safe Overload Capacity	150% of maximum capacity			
Stabilization Time	Within 1 second			
Operating Temperature Range	-10°C to 40°C			
Scale Dimensions (A x B x C x D x E x F)	650 x 500 x 150 x 90 x 896 x 785 mm		800 x 600 x 155 x 90 x 1195 x 933 mm	
Shipping Dimensions (L x W x H)	1022 x 687 x 247 mm M models: 1022 x 687 x 247 mm		1175x 790 x 245 mm M models: 1175 x 790 x 245 mm	
Approx. Net Weight	28.3 kg		46.7 kg	
Approx. Shipping Weight	32. 8 kg		51.7 kg	

DEFENDER™3000 *Hybrid Bench Scales*

Specifications

Front Mount Bench Scale

Model	i-D33XW15B1R5-EU i-D33XW15B1R5-GB	i-D33XW30B1R5-EU i-D33XW30B1R5-GB	i-D33XW60B1R5-EU i-D33XW60B1R5-GB	i-D33XW60B1L5-EU i-D33XW60B1L5-GB
Capacity x Default Readability	15 kg x 2 g	30 kg x 5g	60 kg x 10 g	
Maximum Displayed Resolution	1:7,500	1:6,000		
Linearity/Repeatability	±1d			
Certified Model	**i-D33XW15B1R5EU-M i-D33XW15B1R5GB-M**	**i-D33XW30B1R5EU-M i-D33XW30B1R5GB-M**	**i-D33XW60B1R5EU-M i-D33XW60B1R5GB-M**	**i-D33XW60B1L5EU-M i-D33XW60B1L5GB-M**
Capacity x Certified/Approved Readability	15 kg x 5 g	30 kg x 10 g	60 kg x 20 g	
Maximum Certified Resolution	1:3,000			
Indicator	304 stainless steel indicator			
Column	304 stainless steel front-mount bracket with handle			
Base Construction	Stainless steel removable weighing platform, powder-coated steel base construction, silicon sealed IP65 aluminum loadcell against moisture			
Safe Overload Capacity	150% of maximum capacity			
Stabilization Time	Within 1 second			
Operating Temperature Range	-10°C to 40°C			
Scale Dimensions (A x B x C x D x E x F)	355 x 305 x 121.8 x 75 x 130 x 645.5 mm			550 x 420 x 134 x 80 x 132.9 x 842 mm
Shipping Dimensions (L x W x H)	857 x 564 x 225 mm M models: 495 x 455 x 373 mm			1022 x 687 x 247 mm M models: 1022 x 687 x 247 mm
Approx. Net Weight	11.4 kg			17.3 kg
Approx. Shipping Weight	13.7 kg			21.3 kg

Model	i-D33XW150B1L5-EU i-D33XW150B1L5-GB	i-D33XW150B1X5-EU i-D33XW150B1X5-GB	i-D33XW300B1X5-EU i-D33XW300B1X5-GB
Capacity x Default Readability	150 kg x 20 g		300 kg x 50 g
Maximum Displayed Resolution	1:7,500		1:6,000
Linearity/Repeatability	±1d		
Certified Model	**i-D33XW150B1L5EU-M i-D33XW150B1L5GB-M**	**i-D33XW150B1X5EU-M i-D33XW150B1X5GB-M**	**i-D33XW300B1X5EU-M i-D33XW300B1X5GB-M**
Capacity x Certified/Approved Readability	150 kg x 50 g		300 kg x 100 g
Maximum Certified Resolution	1:3,000		
Indicator	304 stainless steel indicator		
Column	304 stainless steel front-mount bracket with handle		
Base Construction	Stainless steel removable weighing platform, powder-coated steel base construction, silicon sealed IP65 aluminum loadcell against moisture		
Safe Overload Capacity	150% of maximum capacity		
Stabilization Time	Within 1 second		
Operating Temperature Range	-10°C to 40°C		
Scale Dimensions (A x B x C x D x E x F)	550 x 420 x 134 x 80 x 132.9 x 842 mm	650 x 500 x 150 x 90 x 133 x 941 mm	
Shipping Dimensions (L x W x H)	1022 x 687 x 247 mm M models: 1022 x 687 x 247 mm		
Approx. Net Weight	17.3 kg	27.4 kg	
Approx. Shipping Weight	21.3 kg	30.9 kg	

DEFENDER™3000 *Hybrid Bench Scales*

Specifications

Indicators

Model	i-DT33XW
Construction	304 stainless steel housing and mounting bracket
Protection	IP66
Weighing Units	Kilogram, Gram, Pound, Ounce, Pound: Ounce (Kilogram, Gram only for M models)
Application Modes	Weighing, Parts Counting, Checkweighing and Totalization
Display	6-digit, 7-segment LCD display with multi-color backlight, 45 mm high digits
Check Indicator	3 Color (red, green, yellow) backlight
Keyboard	4 function keys
Auto-zero Tracking	Off, 0.5 d, 1 d or 3 d
Zeroing Range	2% or 100% of capacity
Interface	RS232 included
	Optional USB, Ethernet
Power	100-240 VAC / 50/60 Hz Universal Power Supply, hardwired or standard rechargeable battery
Battery Life	Up to 100 hours continuous use with backlight off (rechargeable battery)
Calibration	Zero, Span or 3 point-Linear

Outline Dimensions

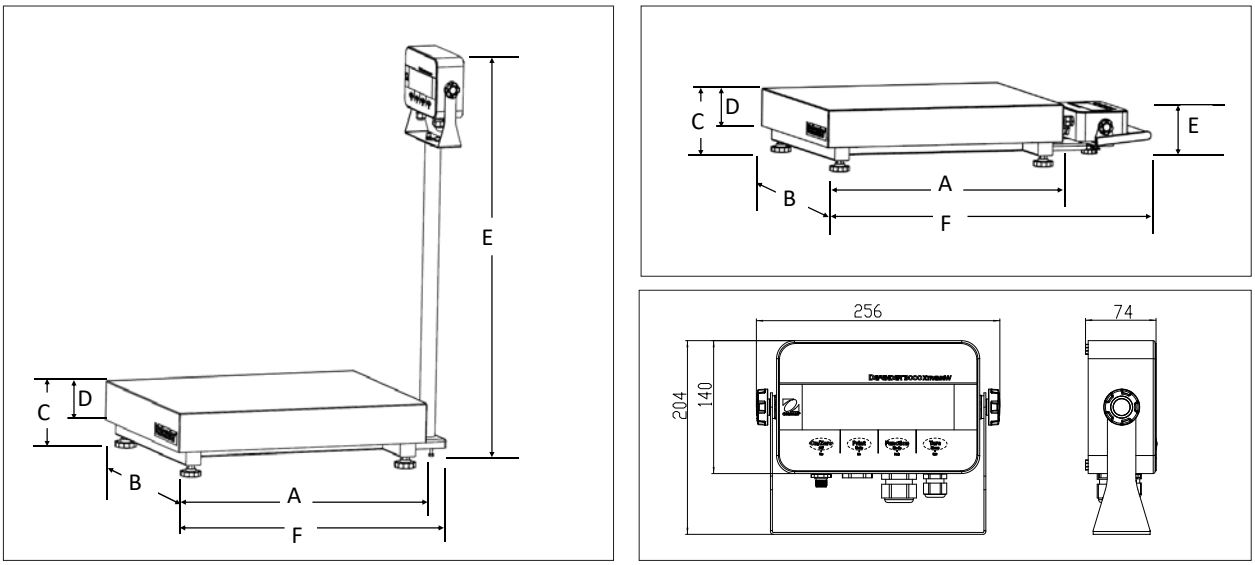

Compliance

- **Metrology:** EN45501 (Scale: T12209; Indicator: TC12208; Load Cell: OIML R60/2017-A-NL1-21.19 / TC12115; OIML R60/2017-A-NL1-21.20 / TC12116; OIML R60/2017-A-NL1-21.21 / TC12117; OIML R60/2017-A-NL1-21.22 / TC12114).
- **Product Safety:** IEC/EN 61010-1; CAN/CSA C22.2 61010-1; UL61010-1
- **Electromagnetic Compatibility:** IEC/EN 61326-1 Class B, basic environments; FCC Part 15 Class A; Canada ICES-003 Class A
- **Ingress Protection:** IEC 60529 – IP66 (for indicator), IEC 60529 – IP65 (for load cell)
- **Compliance Marks:** CE, UKCA
- **Other:** WEEE, RoHS

Accessories

Ethernet Kit	30429666
USB Device Kit i-DT33	30699120
Dust Cover (5) i-DT33	30699121
Wheel Kit, Defender Series	30372146
Wheel Kit SST Defender Series	30616409
Carrying Handle Kit i-DT33	30696600
SF40A Printer	30064202
Cable RS232 i-DT33XW	80500552

Column Kit for i-DT33 indicator:

Column Kit, 330 mm, SST	30696595
Column Kit, 680 mm, SST	30696596
Column Kit, 330 mm, CS	30696597
Column Kit, 680 mm, CS	30696598
Column Kit, 980 mm, CS	30696599

80776688_B 20220203 © Copyright OHAUS Corporation

OHAUS Europe GmbH

Heuwinkelstrasse 3,
8606 Nänikon,
Switzerland

e-mail: ssc@ohaus.com
Tel: 0041 22 567 53 19
e-mail: tsc@ohaus.com
Tel: 0041 22 567 53 20

www.ohaus.com

The management system governing the manufacture of this product is ISO 9001:2015 certified.

OHAUS®